MODEL: P26339A1FTB*

ALL ACCESSORIES OPTIONAL

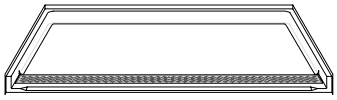

PERSPECTIVE VIEW - N.T.S.

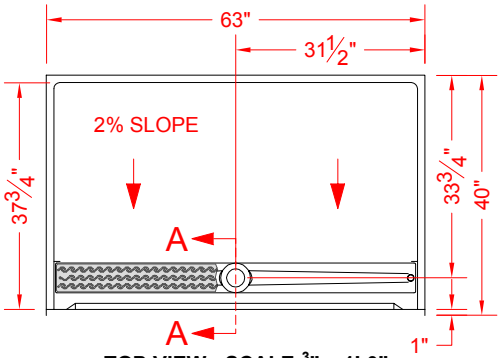

TOP VIEW - SCALE ⅜" = 1'-0"

ADA COMPLIANT

SEE OVER

Features:

-ADA compliant roll-in shower pan with trench drain and stainless steel grate
-Will be ANSI B compliant even if shower door is used and provide 36" clear depth
-Available in various threshold heights
-Molded gelcoat/fiberglass shower pan
-On threshold heights 1-1/2" or taller, mud set is required
-On all threshold heights 1-1/4" or shorter, no mud set is required, but an epoxy adhesive kit is supplied

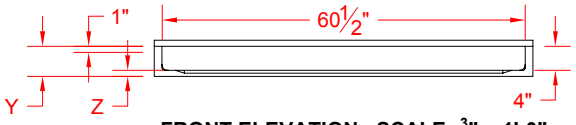

FRONT ELEVATION - SCALE: ⅜" = 1'-0"

***OTHER THRESHOLD HEIGHTS AVAILABLE UPON REQUEST**

MODEL #	UNIT HEIGHT Y	THRESHOLD HEIGHT Z*
P26339A1FTB	6"	1" MIN.
P26339A2FTB	7"	2" MAX.

*** - SEE BACK FOR DETAIL SECTIONS**

PRODUCT SPECIFICATIONS:

-Multi-piece shower pan shall be constructed of gelcoat/fiberglass and have a stainless steel trench drain grate.
-Rough-In: Stud opening +1/4" -0" Nominal Dimensions.

C.S.I. FORMAT SPECIFICATION TEXT AVAILABLE

PRODUCT INFORMATION:

-Accessories: Factory installed, unless prone to damage during installation/shipping. Polished chrome/satin stainless standard, others available.
-Colors: White as standard, others to match any major fixture manufacturer, also available with sprayable solid surface in many colors
-Custom curb heights, other than shown, are available (between min. and max.)

ACCESSORIES:

INSTALLED BY OTHERS:
-Grab bar
-Seat, folding
-Mixing valve, pressure balanced, lever handle, preplumbed tree to supply elbow
-Curtain and rod
-Caulkless drain

CODES:

Designed and manufactured in compliance with the following standards and codes:

-A.N.S.I. Z124.2 Standards for Plastic Showers
-I.P.C. International Plumbing Code
-U.P.C. Uniform Plumbing Code
-A.D.A. Accessibility Guildelines for Buildings and Facilities
-A.N.S.I. A117.1 Accessible and Usable Buildings and Facilities

NOTICE OF LIMITATION:

bestbath™ Intelligent Designs

We reserve the right to make revisions without notice in the design of fixtures or in packaging unless this right has specifically been waived at the time the order is accepted.

P26339A1FTB

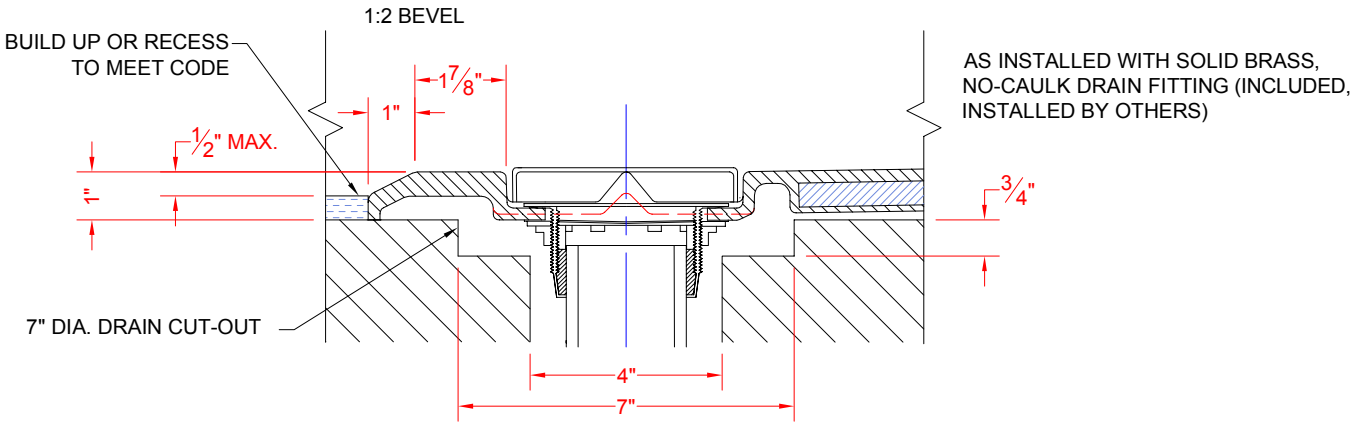

SECTION A-A - SCALE: N.T.S.

P26339A2FTB

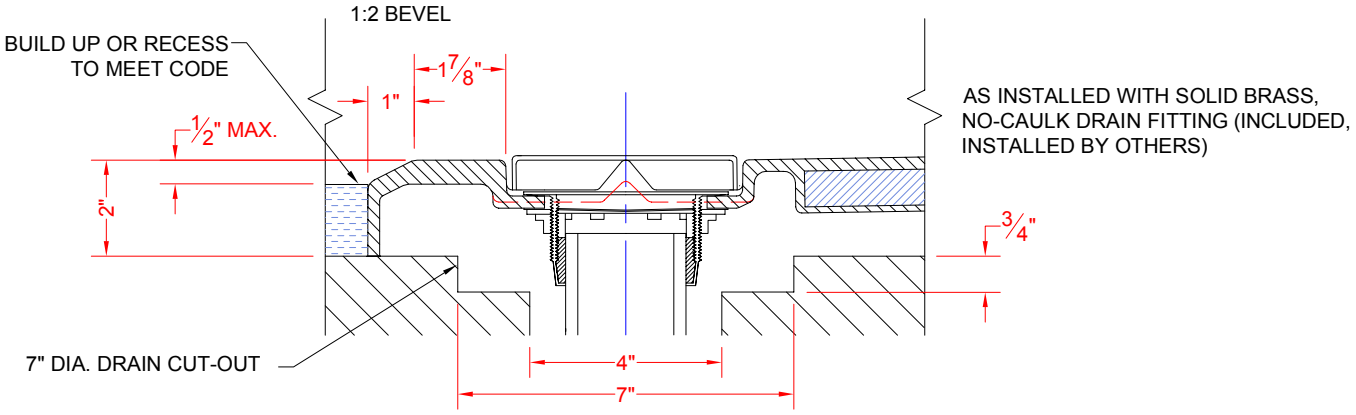

SECTION A-A - SCALE: N.T.S.

****OTHER THRESHOLD HEIGHTS AVAILABLE UPON REQUEST****

bestbath™
Intelligent Designs