INSTALLATION INSTRUCTIONS

Trench Drain Pan V3

(For models requiring mud set)

bestbath® Intelligent Designs

1121

CAUTION: IF NOT INSTALLED PROPERLY, THE SHOWER PAN MAY NOT PERFORM AS DESIGNED AND WILL NOT BE COVERED BY THE WARRANTY.

CROSS-SECTION OF SHOWER PAN (INSTALLED)

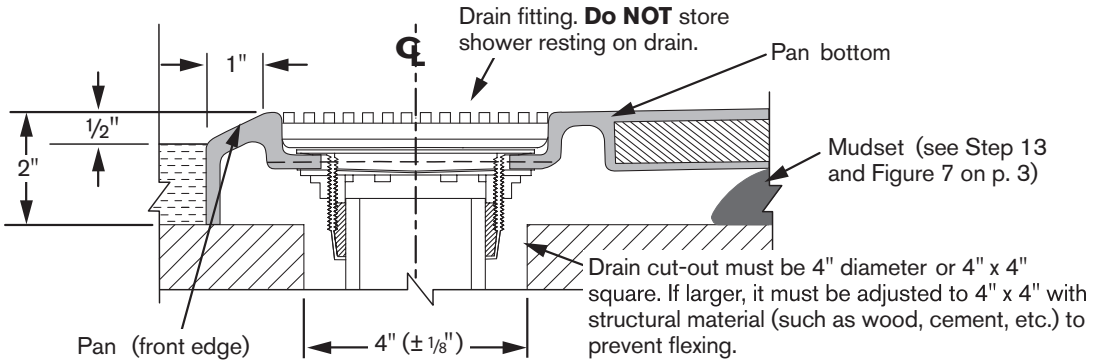

Figure 1

1 Check shower pocket area for level and for correct dimensions. Make sure drain hole in floor is the correct distance from studs and 4" diameter (or 4" x 4" square). The floor must be within ⅛" of level, especially around drain box-out. *(Figure 2)*

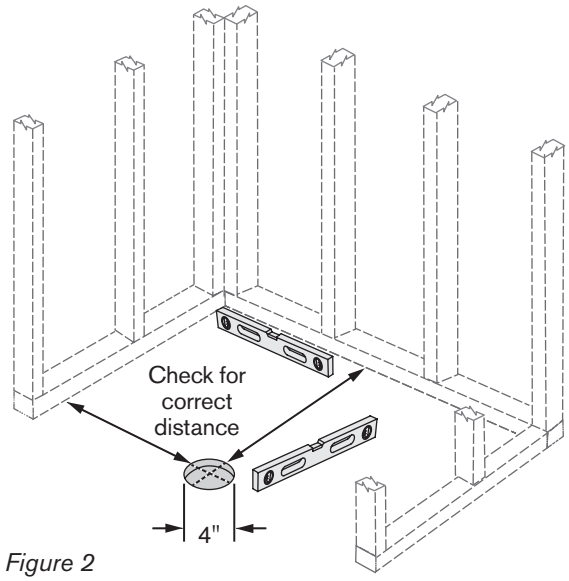

Figure 2

Drain cut-out must be 4" diameter or 4" x 4". Drain pipe must be centered in cut-out.

2 Have a plumber prepare drain pipe to receive the drain; the pipe must be centered in the 4" cutout.

3 **DRY-FIT THE PAN:** Set pan in the pocket. You **MUST** either dry-fit the shower walls or use a level to ensure pan is level, without low spots, and positioned correctly. Shim if necessary. Draw a line on the floor along front edge of pan. *(Figure 3)*

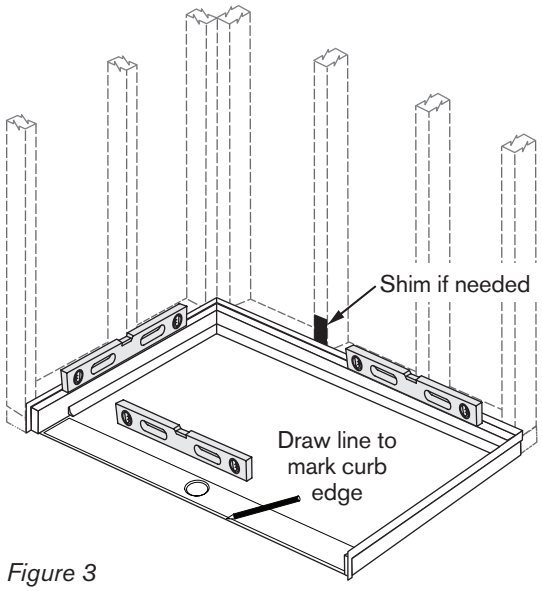

Figure 3

4 Remove pan from the framing pocket.

5 **INSTALL DRAIN IN PAN (see page 2).**

To avoid deforming the pan, once drain is installed DO NOT store the pan resting on the drain.

(continued on page 2)

INSTALLING THE NO-CAULK DRAIN

NOTE: Do not complete drain installation steps below until you have dry-fitted the pan (see Step 3 on page 1). Resting the pan on the drain may deform the pan and cause gaps between the floor and pan when installed.

6. Remove inside compression nut and compression gasket.
7. Apply silicone or plumber's putty around shower pan drain hole on the inside of shower only. *(Figure 4)*
8. Install drain body in shower pan drain hole.
9. Install rubber gasket, fiber gasket and locking nut; tighten locking nut.

Note: The balance of the drain installation will be done after the pan is installed. See Step 15 on page 3.

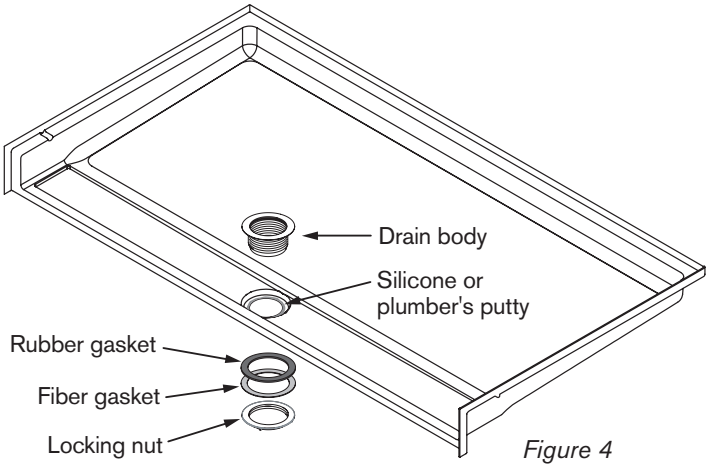

Figure 4

To avoid deforming the pan, DO NOT rest the pan on the drain. This will help prevent gaps between the floor and the pan during installation.

CROSS-SECTION OF NO-CAULK DRAIN (INSTALLED)

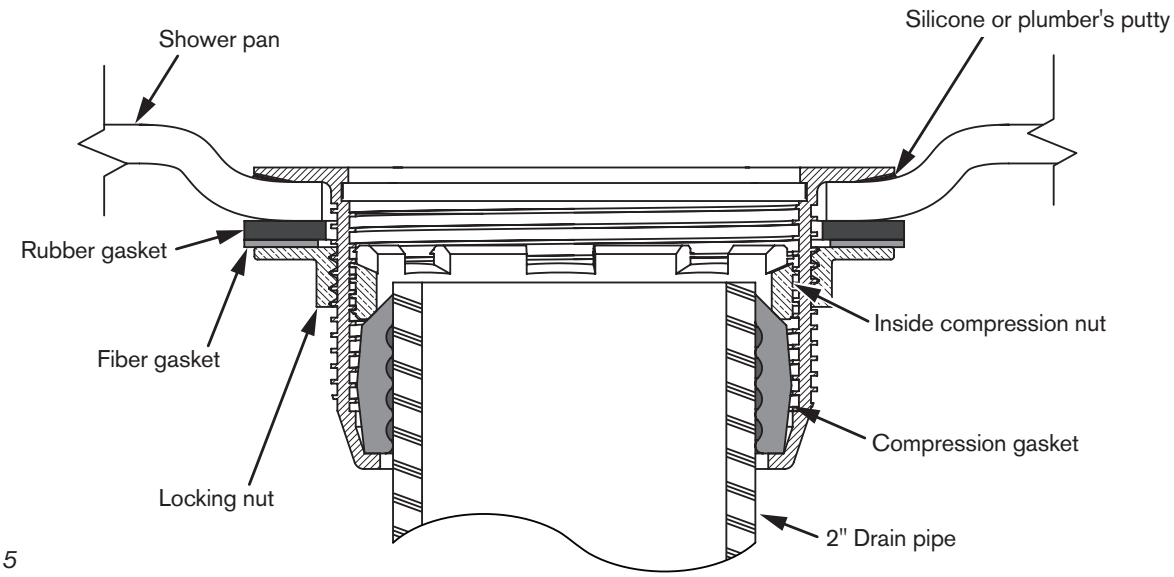

Figure 5

INSTALLING THE SHOWER PAN

10. Sweep the floor and remove all debris from pocket area so mud set will adhere to the floor properly. The floor may be damp but there should be no standing water.
11. Clean underside of pan to remove any debris stuck to it.
12. Before applying the mud set, mark the floor with the pattern and spacing shown below. *(Figure 6)*

! For proper performance, it is critical that mud set is placed exactly as shown.

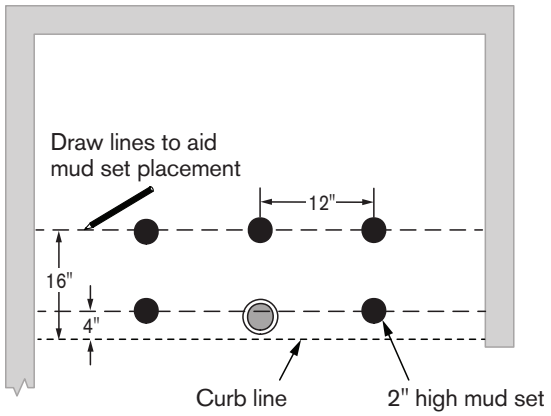

Figure 6

13. Place pan in pocket and prop it up while you apply the mud set. Place thick (2" high, minimum) dollops following the pattern you marked on the floor. The mud set will fill the void to help support the pan. *(Figure 7)*

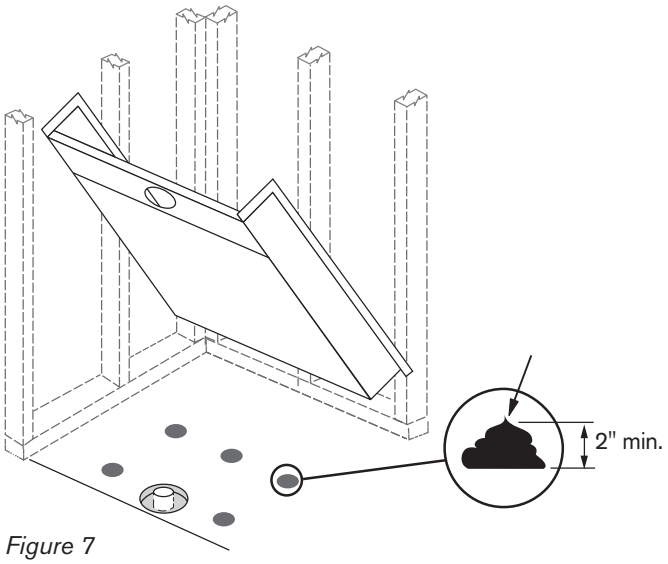

Figure 7

! Mud set is used to support the shower unit. It should not be used for leveling the subfloor. If the subfloor does not meet stated requirements, please use an appropriate product to level the subfloor prior to installation.

14. Lower pan into position; **do not drag or slide it.** Make sure the front aligns with curb line drawn in Step 3. Avoid stepping on pan until mud set has cured; follow curing instructions for the type of mud set used. Check ledges and front edge with a level. *(Figure 8)*

! DO NOT step on pan until mud set has cured.

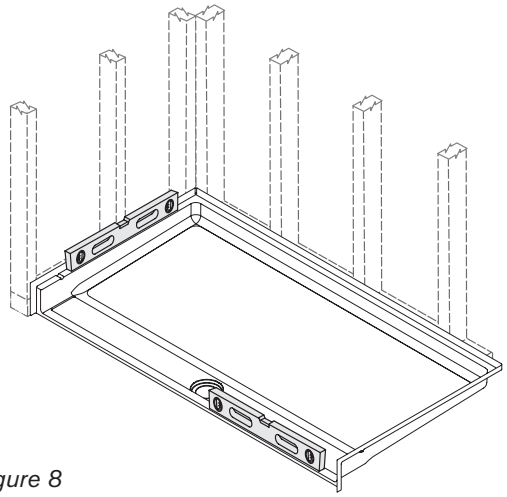

Figure 8

15. **FINISH DRAIN INSTALLATION:** Slide inside compression gasket into drain body and slip over pipe. **Make sure beveled end of inside compression gasket is facing up and flush with pipe surface.** *(Figure 9)*
16. Tighten inside compression nut into drain body using the tool provided.

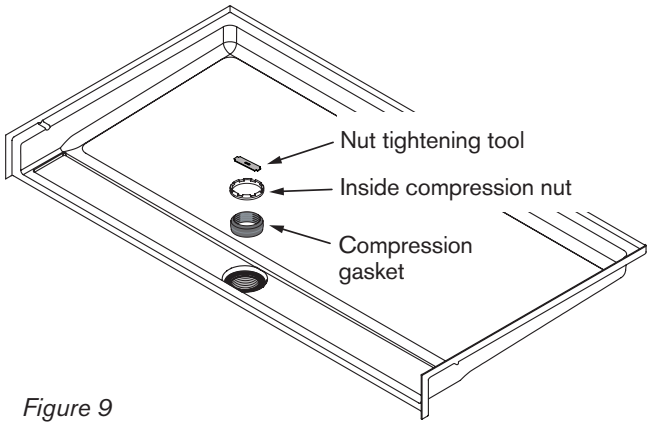

Figure 9

17. When mud set is fully cured, screw flanges to framing.
18. The grate is typically installed after the room is finished. To avoid damage, store grate in a safe place until it is installed.

INSTALLING THE TRENCH GRATE

20 ***Gently place grate over drain. No installation required for grate.***

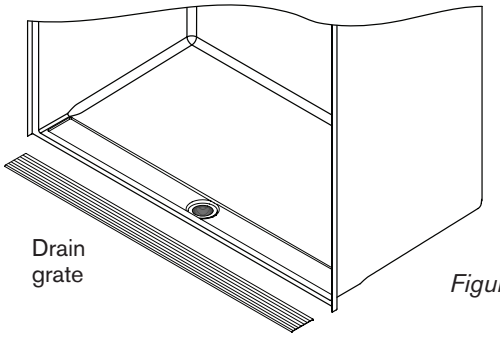

Figure 10

Bestbath is a registered trademark of Best Bath Systems Inc.
© 2020 Best Bath Systems Inc. All rights reserved.